Eötvös Loránd University
Faculty of Education and Psychology

PhD School of Psychology
Head: Professor György Hunyady, MHAS

Cognitive Development Program
Head: Professor Magda Kalmár, Csc, habil.

PH.D. THESIS SUMMARY

RIBICZEY NÓRA

THE ROLE OF MOTHER-CHILD INTERACTION IN THE COGNITIVE DEVELOPMENT OF PRETERM CHILDREN: FOLLOW-UP TO SCHOOL ENTRY

Supervisor**:** Professor Magda Kalmár, CSc, habil.

2010.

Introduction – The issues addressed by the thesis

A number of research reported a lag of cognitive development in preterm children as a group (e.g. Halsey, Collin and Anderson, 1993; Landry, Smith et al., 2000, Sansavini, Rizzardi et al., 1996, Taylor, Klein and Hack, 2000), hence preterm birth can be considered a risk factor for later cognitive deficiencies. This underlines the importance of studying the development in preterm children. On the one hand, the research findings have practical implications for planning programmes of prevention and intervention. In Hungary the rate of low-birthweight preterm infants among the neonates is 8 -9 %, nearly twice the average rate in the EU (UNICEF, 2007), which warrants follow-up studies with Hungarian children. On the other hand, studies on preterm children can provide answers to questions of theoretical relevance as well. When development takes place in non-optimal conditions it can be regarded as an experiment created by nature, landing itself for studying the mechanisms of development (Aylward, 2002; Kalmár, 2007). The comparison of children with medical risks and their non-risk counterparts may reveal the interplay of biological and environmental factors (Minde, 1993).

The understanding of the long-term outcome of prematurity requires an approach based on a model of development which, in contrast to the main-effect models, can take into account the bi-directional influences of the environment and the individual (Kalverboer, 1988). The transactional model proposed by Sameroff (2005) emphasizes the continuous dynamic interactions between the developing child and the environment. The environmental effects toward the child partly depend on the actual state of the child. The environment can mitigate or else aggravate the developmental disorders related to perinatal risks. The interplay of medical and environmental risk factors were demonstrated by several studies (e.g. Poehlmann and Fiese, 2001).

One approach to grasp the environmental influences is the observation of family interactions, specifically the mother-child interactions. The quality of the caregiver-infant interaction is a potential predictor of the developmental outcome (Rocissano, Yatchmink, 1983; Cohen, Parmelee, et al, 1992). Differential characteristics of the interactions of mothers with their preterm infants have been found (e.g. Barnard, Bee and Hamond, 1984; Goldberg and DiVitto, 2002; Landry, 1995)

Objectives

The aim of the study was to gain information on the factors underlying the variability of the developmental outcome of prematurity. The evidence available in the literature on the developmental lag in the preterm children as compared to their full-term counterparts is inconsistent. It is not yet clear which domains are implicated and how long the adverse effects of prematurity persist. A further aim was to contribute to the understanding of the role the environment plays in the developmental outcome and to find out whether the medical risk status of the infants moderates this role. The prediction of later IQ from early developmental measures was also within the scope of the study.

Moderate-risk preterm children were followed from birth to school entry. Moderate risk means the lack of severe perinatal complications, non-extreme low birth weight and non-extreme immaturity. In addition to the comparison of the development in preterm and full-term children the concurrent and longitudinal patterns of development as well as the interplay of biological and environmental factors were also studied.

The preterm children were expected to lag behind their full-term counterparts in cognitive development. It was also expected that the adverse effects of prematurity would manifest themselves more markedly at certain ages (e.g., school entry) than at others („moving risk", Gordon and Jens, 1988). The contribution of the environmental factors to the developmental outcome, the predictive value of the early developmental measures, and the fluctuation of performances during the first 6 years of life were also studied.

Method

The subjects of the study were participants of a research project aiming at the concurrent and longitudinal patterns of early development (Unit of Cognitive Developmental Psychology, ELTE Institute of Psychology, principal researcher: Magda Kalmár). Prematurely born and full-term infants were followed to 6 years of age. The study included 6 data collection waves, at ages 6, 12, 24, 36 months, and 4 and 6 years. At 12 months the data of 29 preterm and 40 full-term infants were available, out of which the data of 47 children were used in the longitudinal analyses. In the preterm group the mean birth weight was 1435.2 grams (SD = 265.8), the mean gestational age was 30.8 weeks (SD = 1.6). Participants of the Budapest Family Study (head: Judit Gervai) served as the comparison group which consisted of healthy full-term infants (Gervai, 2005). The target and the comparison groups were

matched. As the groups differed on maternal education the difference on this measure was statistically controlled for.

Developmental assessments were performed at each data collection wave. In the first 36 months the development was assessed using the BSID II (Bayley, 1993). The measures were the Mental Development Index (MDI) and the Psychomotor Development Index (PDI). At 4 and 6 years the Hungarian revisions of the WPPSI (OWI; Nagy, 1988), and the WISC (MAWGYI-R; Lányiné, Nagy et al, 1996), respectively, were administered (measures: full-scale IQ,VQ, PQ), at 6 years supplemented by a version of the Bender-Gestalt Test (modified by Santucci and Galifret-Granjon, 1960).

The HOME inventory (Home Observation for the Measurement of the Environment, Caldwell and Bradley, 1979) was administered to assess the quality of the home environment and the mother-child interactions were observed at 12 months and 4 years. The observations took place in the home of the families, in free play and in a structured play situation at 12 months, in a playful teaching situation at 4 years. In the latter the mother-child dyads were given the task to assemble a 3-D puzzle of an elephant. The maternal and infant behaviours as well as global characteristics of the interactions were coded from video-recordings. Coding systems were designed by the author. In addition, for the 12-month free play a coding system of the Budapest Family Study was also used. Interrater reliabilities were checked and found satisfactory.

Data on the infants' temperament gained by coding the behaviour during the administration of the BSID II (Ferenczi and Kalmár, 2009) were also used for the analysis. The design of the study is summarised in Table 1.

Developmental assessment	Measurement age
Bayley Scales of Infant Development II. (Bayley, 1993)	6, 12, 24, 36 months
OWI – the Hungarian revision of the WPPSI (Nagy, 1988)	4 years
MAWGYI-R - the Hungarian revision of the WISC (Lányiné, Nagy et al, 1996)	6 years
Bender-Gestalt Test, modified by Santucci and Galifret-Granjon, 1960	6 years
Quality of the home environment	
HOME - Home Observation for the Measurement of the Environment (Caldwell and Bradley, 1979)	12 months 4 years
Observations of the mother-child interactions	
Coding system for the free-play (Ney, Szöllősi et al, 2005) Coding system for coding the free and the structured play situation together (Ribiczey, manuscript, see the Appendix of the thesis)	12 months
Coding system for the teaching situation (Ribiczey, manuscript, see the Appendix of the thesis)	4 years
Observations of the infant temperament	
Coding the behaviour during the administration of the BSID II (Ferenczi and Kalmár, 2009)	12 months

Table 1. Instruments used at each data collection wave.

Results and Discussion

1. Impact of prematurity on the development

Our results corroborated the findings of earlier studies which suggested that the adverse effects of premature birth persisted beyond infancy (e.g. Halsey, Collin and Anderson, 1993; Landry, Smith, et al, 2000, Sansavini, Rizzardi, et al, 1996, Taylor, Klein and Hack, 2000). The mean MDIs and IQs of the preterm group fell in the normal zone at each assessment, their lag was relative as compared to the full-term children. With the exception of 24 months, their mean PDIs belonged to the mildly delayed category. It varied across the measurement ages whether the preterms lagged behind significantly, and if so, to what extent.

At certain ages the mean performances of two groups were similar, while at other ages the preterms scored even 19 points lower. The fluctuations of the performances in the preterms can be understood in light of the „moving risk" model (Gordon and Jens, 1988). It is demonstrated in figures 1 and 2. The distance graphs show the differences between the means in function of the standard deviations of the normative comparison group (Glass, McGraw and Smith, 1981). It is important to note that the graphs are based on group means. Within the

preterm group there are substantial inter-individual variations; the performances of several prematurely born children could not be distinguished from those of their non-risk counterparts.

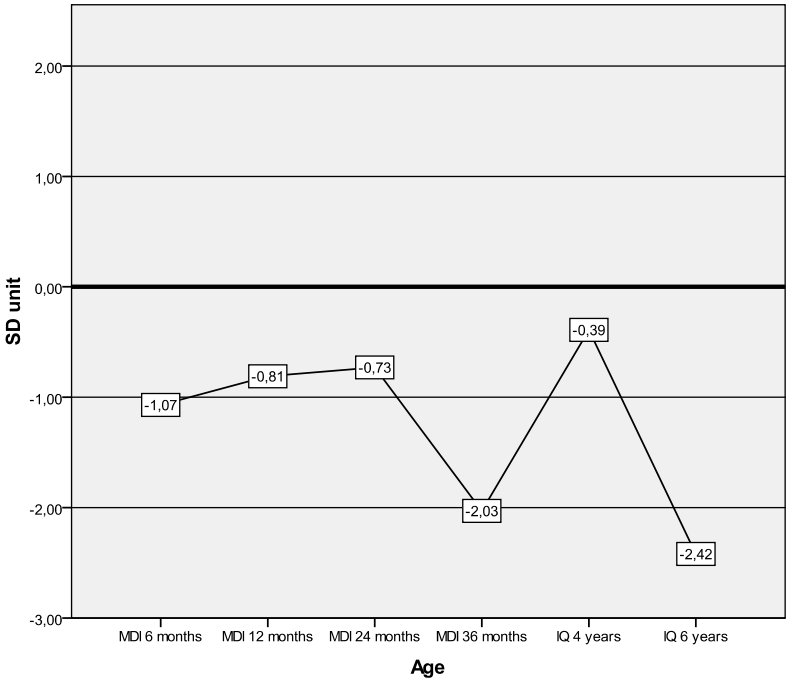

Figure 1: Lag of the preterm group on the MDIs and IQs: Distance graph

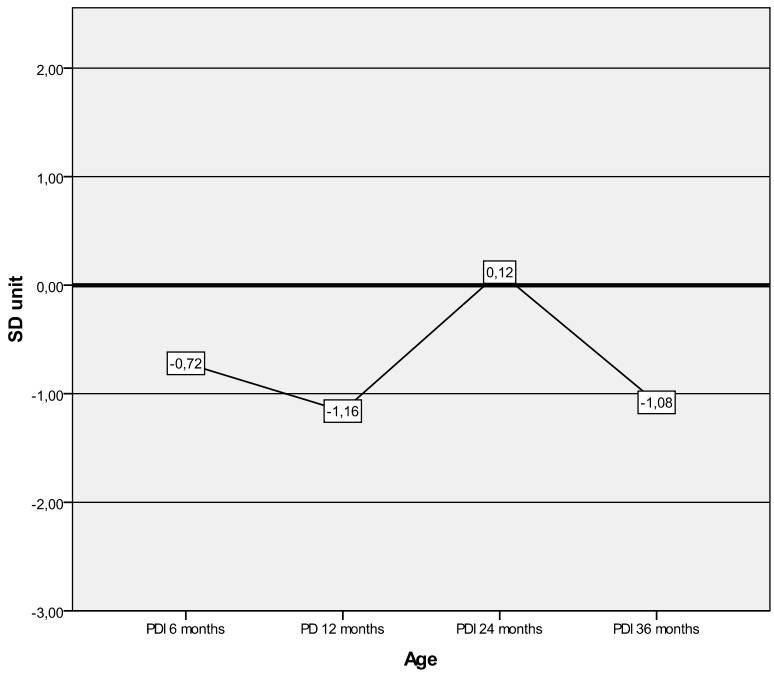

Figure 2: Lag of the preterm group on the PDIs: Distance graph

2. Mother-child interaction in the two groups

In order to reduce the number of variables of the observations covering maternal and child behaviours as well as global characteristics of the interactions exploratory factor analyses were performed, for the three coding systems separately. The analyses resulted in 6 factors of the free play at 12 months, 5 factors of the total play situation (free play and structured play together) at 12 months, and 4 factors of the teaching situation at 4 years. In the further data analysis the factor scores were used.

In line with findings reported in the literature when the infants were 12 month-olds we found differences between the preterm and the full-term dyads in certain maternal and child behaviours as well as certain interactional characteristics (e.g. Fiese, Poehlmann, et al, 2001; Goldberg and DiVitto, 2002, Landry, 1995).The interactions appeared to be somewhat less favourable even in our moderate risk preterm dyads. The mothers of preterms tended to be more passive to which the infants reacted with more initiatives. The preterm infants were more active motorically, changed toys more often and vocalised less. On the other hand, there are also similarities, and we cannot claim to have found a pattern of interaction specific of the dyads with preterm infants nor one typical of them.

In the teaching situation at 4 years of age the two groups differed only in that the pattern with competent, motivated, and persistent children whose mothers' positive attitude, stimulating and supportive behaviour („scaffolding", Wood, Bruner and Ross, 1976) contributed to the successful solution of the task occurred more frequently in the full-term comparison group.

The lower maternal activity found in the preterm group is inconsistent with the results of some earlier studies which suggested that mothers of preterm infants tended to be more stimulating and made more efforts to initiate interactions (Crnic, Ragozin, et al, 1983; Goldberg and DiVitto, 2002; Jarvis, Myers and Creasey 1989; Bakeman and Brown, 1980; Wijnroks, 1998). It seems that in our sample the maternal reaction to the premature status of the infants was more often a kind of reduced activity and stimulation, rather than compensatory efforts. Hence our data corroborated the findings of those authors who reported that mothers of preterms were prone to be more passive and less stimulating, and that in the preterm dyads the interactions altogether were more likely to be less harmonious (Barrera, Rosenbaum and Cunningham, 1987; Goldberg, Lojkasek, et al, 1989; Zelkowitz and Papageorgiou, 1996; Fiese, Poehlmann, et al, 2001).

The findings of observations at 12 months and those at 4 years were moderately related. Certain continuity manifested itself in the child's mood and activity, and maternal control at 12 months predicted negative interactions at 4 years.

3. The role of the environment in the development of children

The quality of the mother-child interactions were related to the developmental outcome. The links between the patterns of interactions and the developmental measures were more marked in the preterm group as compared to the full-term comparison sample. This finding is in line with earlier claims that moderate biological risk conditions may potentiate the effects of certain environmental factors (Sameroff and Seifer, 1983; Barratt, Roach and Leawitt, 1996; Smith, Landry and Swank, 2000). It is also consistent with the transactional model in which it implies that environmental factors may modulate the outcome of perinatal risks, attenuate or aggravate the adverse effects (Poehlman and Fiese, 2001; Aylward, 2002; Sameroff, 2005). Preterm infants whose mothers were passive and less demanding in the play interaction had lower PDIs at 12 months. In contrast, maternal involvement and teaching were related to higher MDIs. It suggests that maternal involvement, activity, expectations, and teaching efforts may foster the development in the preterm infants. The level of the children's

competence and maternal stimulation in the teaching situation at 4 years predicted the PQs at 6 years (Saltaris, Serbin et al, 2004).

In the full-term group the only link was found between maternal passivity and lower PDIs at 12 months.

Certain behavioural characteristics like activity, mobility, and mood were associated with the developmental outcome in the preterm infants: the more active, mobile, and cheerful infants had higher PDIs.

4. Continuity and discontinuity of development

Due to the longitudinal design of the study the data lent themselves to the search for the evidences of continuity and discontinuity of development. First the stability of developmental measures at group level was tested. For the total sample the correlations between the MDIs at the 4 measurement points varied from 0.19 – 0.47, between the PDIs from 0.21 - 0.40, which is in line with earlier reports (Pomerleau, Scuccimarri and Malcuit, 2003; Bayley, 1993). The correlations computed separately for each group showed that the correlations in the full-term group were much more consistent with the expected pattern: the developmental measures from the first 3 years had low correlations with the later IQs, but the IQs at 4 and 6 years were highly correlated (Figures 3 and 4). The development appeared more continuous in the preterm children. It may be explained by the larger variance of performances in the risk group and the relatively stable places of the individuals in the rank order within the group (Bayley, 1993).

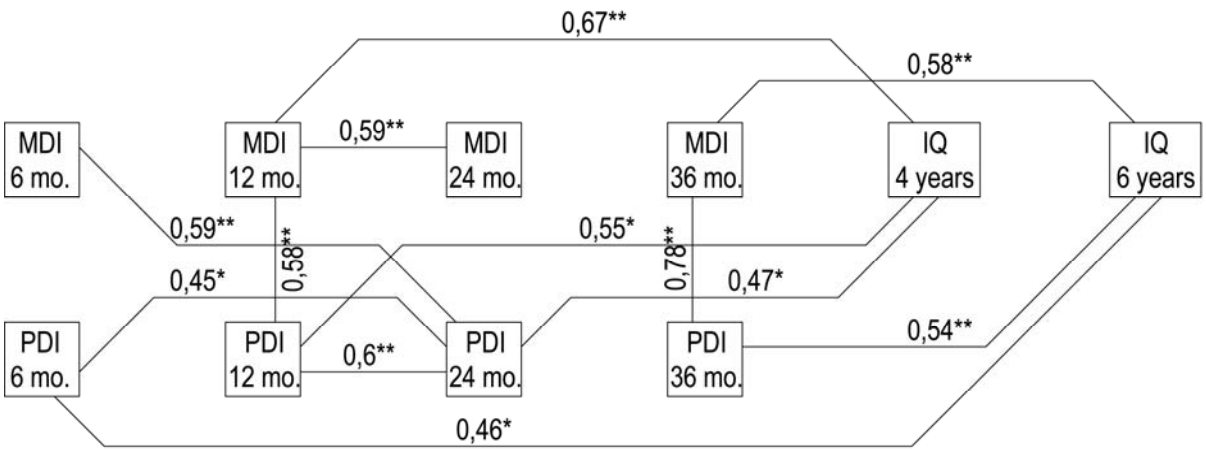

Figure 3. Longitudinal correlations of developmental measures: Preterm children

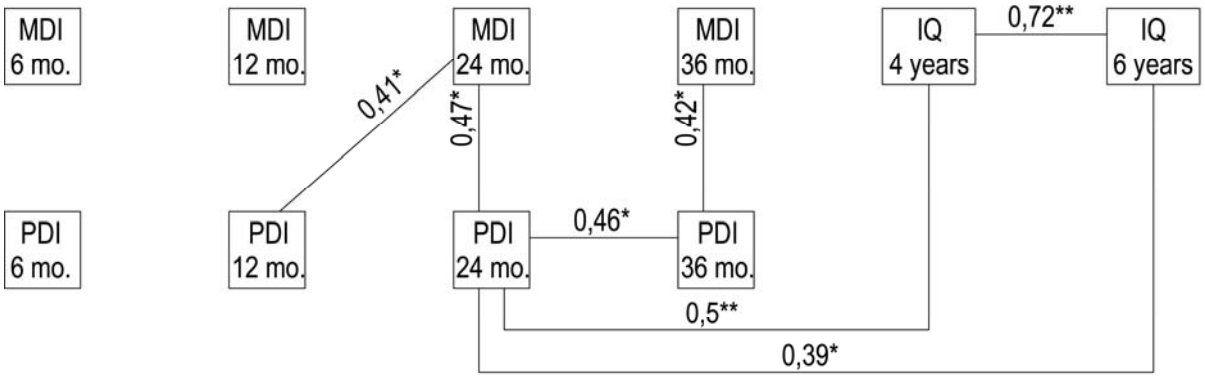

Figure 4. Longitudinal correlations of developmental measures: Full-term children

The IQs at 6 years were predicted by different variables in the two groups: for the full-terms the 4-year IQ, for the preterms the 3-year MDIs and PDIs were predictive.

A cluster analysis identified 4 distinct longitudinal patterns of performances. In a small group, consisting mainly of preterm children, the scores slightly increased over the first 6 years, and the performances at 6 years were reassuring. The majority of the preterms had less optimal developmental courses: they scored at the lowest level both in the beginning and at 6 years. Mainly full-term children belonged to the 3rd and 4th clusters. The children in the former had the highest scores while those in the latter had very steady, slightly raising performances. The children belonging to each of the clusters had distinct patterns of background factors. The maternal stimulation and teaching efforts were the highest in the 4th cluster. Such aspects of the interactions were less optimal in the first two clusters. These results are further evidences of the development fostering role of the environment (Rocissano and Yatchmink, 1983; Cohen, Parmelee, et al, 1992; Cowan, Cowan, et al, 1991; Pettit, Bates and Dodge, 1997; Tamis-LeMonda, Bornstein and Baumwell, 2001; Smith, Landry and Swank, 2000).

5. Factors contributing to the developmental outcome: Path analysis

For the path analysis of the factors contributing to the 12 month developmental outcome the variables already discussed were complemented by data on the infant's temperament. The model which suits well our data is presented in Figure 5. The complex

pattern of factors underlying the outcome includes the perinatal status, aspects of the mother-infant interactions, and certain temperamental characteristics, consistently with findings reported by several authors (e.g. Bayley, 1993; Miceli, Whitman, et al, 1998; Sigman, Cohen and Beckwith, 1997). As expected, the perinatal status was directly related to the 12-month developmental outcome and it was true for the mother-infant interactions as well. However, in order to attain an appropriate match, temperamental variables – namely, demandingness, distractibility, and cooperativeness - needed to be entered. There is a direct link between the temperament and the outcome, but the contribution of the temperamental characteristics seems mainly to be realized through the mother-infant interactions. It is to note that the certain interactional variables retained in the model also cover temperament-related infant behavioural characteristics like motility or vocalisation.

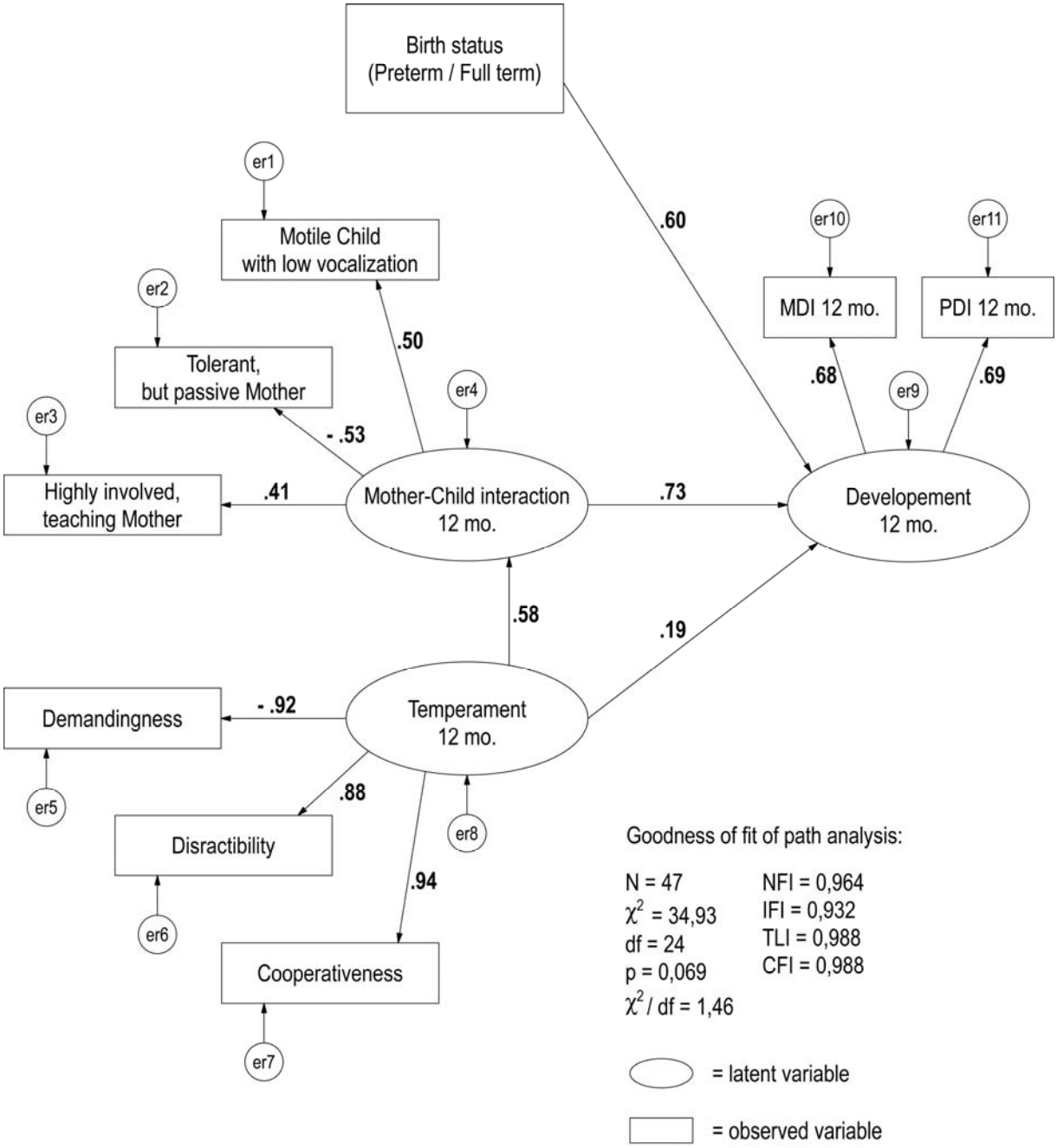

Figure 5. Path model of the factors contributing to the 12 month developmental outcome.

Summary: Experiences, limitations, and practical implications of the research

In addition to the high rate of premature births in Hungary the need for such research is underscored by the lack of organised service of intervention targeting moderate-risk preterm infants, even as compared to the also far less than optimal provisions for the very high risk or handicapped infants. In the light of the international literature the moderate-risk preterms altogether receive much less attention than their high-risk counterparts.

One of the most notable finding of our study is the persisting lag in the development of moderate-risk preterm infants, still detectable at the school entry age. Likewise, the patterns if mother-child interactions were less favourable in the dyads with preterms not only at 12 months but as late as at 4 years as well. This lends support to the claim that prematurely born infants, even though not high-risk, may need access to intervention programmes to foster their development and help them compensate for their relative disadvantage.

Our results on the contribution of environment, more specifically that of maternal behaviour, are worth considering in planning intervention programmes. The favourable effects of maternal involvement, stimulation, and teaching efforts have two implications. Firstly, enrichment programmes could help the moderate-risk preterm children catch up with their non-risk peers by the time of school entry. Secondly, the children could benefit also from parent-focused intervention, parent training programmes.

The study had certain limitations. The relatively small sample size, albeit it is quite common in this research field, imposes constraints on the generalizability of findings. On the other hand, in following up smaller samples we had the opportunity to use more refined measures which could give a more detailed picture of the factors underlying the development of preterm children. Sample attrition is a common problem in longitudinal studies. In order to avoid misrepresentations those subjects who had missing data from more than one data collection point were not included in the longitudinal analyses. In addition, the problem of missing data was treated by a modern data replacement technique. A further flaw of the study was the lack of perfect match of the target and the comparison samples on maternal education which was handled by statistically controlling the influence of the mismatching variable. Finally, we are aware that in spite of the considerable variety of measures included in the study it was not possible to tackle all of the factors which potentially shaped the developmental outcomes (e.g., the father-child interactions or the quality of day care settings).

References

Aylward, G. P. (2002): Methodological issues in outcome studies of at-risk infants. Journal of Pediatric Psychology, 27 (1), 37-45.

Bakeman, R., Brown, J. V. (1980): Early interaction: consequences for social and mental development at three years. *Child Development, 51*, 437-447.

Barnard, K. E., Bee, H. L., Hammond, M. A. (1984): Developmental changes in maternal interactions with term and preterm infants. *Infant Behavior and Development,* 7, 101-113.

Barratt, M. S., Roach, M. A., Leawitt, L. A. (1996): The impact of low-risk prematurity on maternal behaviour and toddler outcome. *International Journal of Behavioral Development*, 19, 581-602.

Barrera, M., E., Rosenbaum, P., L., Cunningham, C., E. (1987): Corrected and uncorrected Bayley scores: longitudinal developmental patterns in low and high birthweight preterm infants. *Infant Behavior and Development*, 10, 337-346.

Bayley, N. (1993): *Bayley Scales of Infant Development*. Psychological Corporation, New York

Caldwell, B. M., Bradley, R. (1979): *Home Observation for Measurement of the Environment.* Little Rock: University of Arkansas

Cohen, S.E., Parmelee, A.H., Beckwith, L., Sigman, M. (1992): Biological and social precursors of a 12 year competence in children born preterm. In: C.W. Greenbaum, J.G. Auerbach (Eds.*); Longitudinal studies of children at psychological risk: Cross national perspectives.* Ablex Publ., Norwood, NJ.

Cowan, C. P., Cowan, P. A., Heming, G., Miller, N. B. (1991). Becoming a family: Marriage, parenting, and child development. In P. A. Cowan & M. Hetherington (Eds.), *Family transitions* (pp. 79–109). Hillsdale, NJ: Erlbaum.

Crnic, K.A., Ragozin, A.S., Greenberg, M.T., Robinson, N.M., Basham, R.B. (1983): Social interaction and developmental competence of preterm and full-term infants during the first year of life. *Child Development,* 54, 1199-1210.

Ferenczi Sz. Gy., Kalmár M. (2009): A temperamentum és a fejlődés kapcsolata koraszülött és időre született kisgyermekeknél. *Gyógypedagógiai Szemle*, 4., 202-217.

Fiese, B. H., Poehlmann, J., Irwin, M., Gordon, M., Curry-Bleggi, E. (2001). A pediatric screening instrument to detect problematic infant-parent interactions: Initial reliability and validity in a sample of high and low risk infants. *Infant Mental Health Journal, 22,* 463–478.

Gervai J. (2005): A Budapesti Családvizsgálat. *Alkalmazott Pszichológia*,VII. 4. 5-13.

Glass, G. V., McGraw, B., Smith, M. L. (1981): *Meta-analysis in social research*. Beverly Hills: Sage.

Goldberg, S., DiVitto, B. (2002): Parenting children born preterm. In: Bornstein, M.H. (ed.), *Handbook of parenting. Vol.3*., Mahwah, N.J.: Erlbaum, 339-360.

Goldberg, S., Lojkasek, M., Gartner, G., Corter, C. (1989): Maternal responsiveness and social development in preterm infants. In M.H. Bornstein (Ed), *Maternal responsiveness: Characteristics and consequences. New Directions for Child Development*, No. 43. San Francisco, Jossey-Bass, 89-103.

Gordon, B.M., Jens, K.G. (1988): A conceptual model for tracking high-risk infants and making early service decisions. *Journal of Behavioral and Developmental Pediatrics*, 9, 279-286.

Halsey, C.L, Collin, M.F., Anderson, C.L. (1993): Extremely low birth weight children and their peers: A comparison of preschool performance. *Pediatrics.* 91, 807–811.

Jarvis, P. A., Myers, B. J., Creasey, G. L. (1989): The effects of infants' illness on mothers' interactions with prematures at 4 and 8 months. *Infant-Behavior-and-Development.* 12 (1), 25-35.

Kalmár M. (2007): *Az intelligencia alakulásának előrejelezhetősége és váratlan fordulatai. Rizikómentesen született, valamint koraszülött gyerekek követésének tanulságai.* ELTE Eötvös Kiadó

Kalverboer, A.F. (1988): Follow-up of biological high-risk groups. In: Rutter, M. (Ed.): *Studies of psychosocial risk: the power of longitudinal data*. Cambridge University Press, 114-138.

Landry, S. H. (1995). The development of joint attention in premature low birth weight infants: effects of early medical complications and maternal attention-directing behaviors. In C. Moore & P. J. Dunham (Eds.), *Joint attention: Its origins and role in development.* (pp. 223–250). Hillsdale, NJ: Lawrence Erlbaum Associates.

Landry, S. H., Smith, K. E., Swank, P. R., Miller-Loncar, C. L. (2000): Early maternal and child influences on children's later independent cognitive and social functioning. *Child Development*, 71, 2, 358-375.

Lányiné Engelmayer Á., Nagy É., Nagyné Réz I., Ringhofer J., Szegedi M. (1996): Az intelligencia mérése gyermekeknél. A HAWIK–R magyarországi változata, a MAWGYI–R bemutatása, használati utasítása és alkalmazása. In Kun M., Szegedi M. (szerk.): *Az intelligencia mérése.* (6. átdolgozott, 3. részében új kiadás) Akadémiai Kiadó, Budapest, 227–369.

Miceli, P. J., Whitman, T. L., Borkowski, J. G., Braungart-Rieker, J., Mitchell, D. W. (1998): Individual Differences in Infant Information Processing: The Role of Tem- peramental and Maternal Factors. *Infant Behavior and Development*, 21, 119–136.

Minde, K. (1993): Prematurity and serious medical illness in infancy: Implications for development and interventions. In.: C. H. Zeanah, Jr. (Ed.): *Handbook of Infant Mental Health,* New York, The Guilford Press, 87-105.

Nagy É. (1988): Vizsgálatok az óvodás Wechsler-intelligenciateszttel. *Gyógypedagógiai Szemle,* 16, 41–45.

Ney K., Szöllősi Á., Fenes D., Gervai J. (2005): A szülő-csecsemő interakciók jellemzői és kódolási lehetőségei. *Alkalmazott Pszichológia*. VII. 4. 38-48.

Pettit, G. S., Bates, J. E., Dodge, K. A. (1997): Supportive parenting, ecological context, and children's adjustment: A seven-year longitudinal study. *Child Development*, 68, 908–923.

Poehlmann, J., Fiese, B.H. (2001): Parent-infant interaction as a mediator of the relation between neonatal risk status and 12-month cognitive development. *Infant Behavior & Development,* 24, 171–188.

Pomerleau, A., Scuccimarri, C., Malcuit, G (2003): Mother-infant behavioral interactions in teenage and adult mothers during the first six months postpartum: relations with infant development. *Infant Mental Health Journal*, 24 (5), 495-509.

Rocissano, L., Yatchmink, Y. (1983): Language skill and interactive patterns in prematurely born toddlers. *Child Development*, 54, 1229-1241.

Sameroff, A. J. (2005): The Science of Infancy: Academic, Social, and Political Agendas, *Infancy*, *7*(3), 219–242.

Sameroff, A. J., Seifer J. (1983): Familial risk and child competence. *Child Development*, 54, 1254-1268.

Saltaris, C., Serbin, L.A., Stack, D.M., Karp, J.A., Schwartzman, A.E., Ledingham, J.E. (2004): Nurturing cognitive competence in preschoolers: A longitudinal study of intergenerational continuity and risk. *International Journal of Behavioral Development*, 28, 105-115.

Sansavini, A., Rizzardi, M., Alessandroni, R., & Giovanelli, G. (1996). The development of Italian low- and very-low-birthweight infants from birth to 5 years: the role of biological and social risks. *International Journal of Behavioral Development,* 19, 533–547.

Santucci, H., Galifret-Granjon, N. (1960): *A Bender-teszt Santucci és Galifret-Granjon féle változatának pontozási rendszere*. Kézirat. Fordította: Kalmár Magda

Sigman, M., Cohen, S.E., Beckwith, L. (1997): Why Does Infant Attention Predict Adolescent Intelligence? *Infant Behavior & Development,* 20 (2), 133-140.

Smith, K. E., Landry, S. H., Swank, P. R. (2000): Does the Content of Mother's Verbal Stimulation Explain Differences in Children's Verbal and Nonverbal Cognitive Skills? *Journal of School Psychology,* 38, 1, 27-49.

Tamis-LeMonda, C. S., Bornstein, M. H., Baumwell, L. (2001): Maternal responsiveness and children's achievement of language milestones. *Child Development*, 72, 748–767.

Taylor, G. H., Klein, N., Hack, M. (2000): School-age consequences of birth weight less than 750 g: A review and update. *Developmental Neuropsychology*, 17 (3), 289-321.

UNICEF (2007): Child poverty in perspective: An overview of child well-being in rich countries. *Innocenti Report Card* 7.

Wijnroks, L. (1998): Early maternal stimulation and the development of cognitive competence and attention of preterm infants. *Early Development and Parenting*, 7, 19-30.

Wood, D. J., Bruner, J., Ross, G. (1976): The role of tutoring in problem solving. *Journal of Child Psychology and Psychiatry*, 17, 89-100.

Zelkowitz, P., Papageorgiou, A. (1996): Childrearing attitudes among parents of very low birthweight and normal birthweight children. *Developmental and Behavioral Pediatrics*, 17, 84-89.